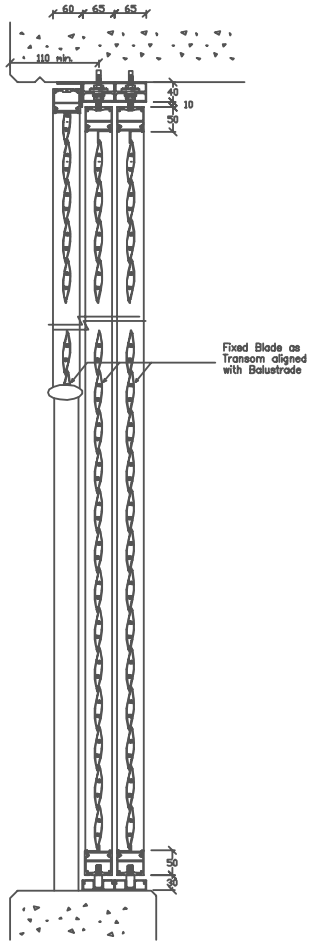

TYPICAL SECTION
BALCONY LOUVRE ASSEMBLY

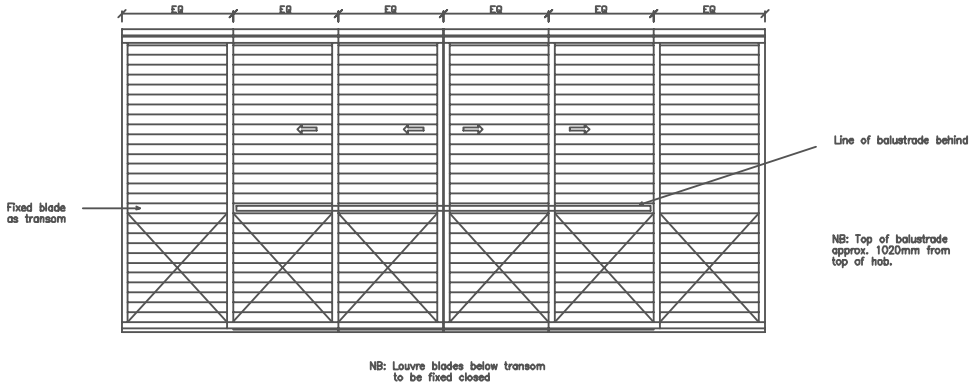

TYPICAL LOUVRE INTERNAL ELEVATION

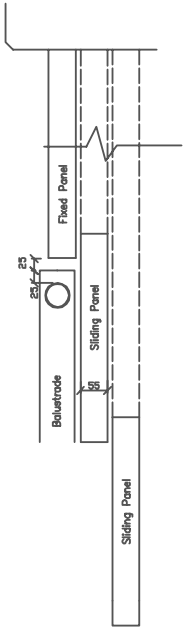

PLAN DETAIL

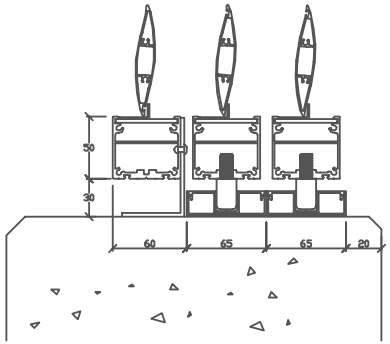

TYPICAL DETAIL – BOTTOM TRACK

Scale 1 : 2

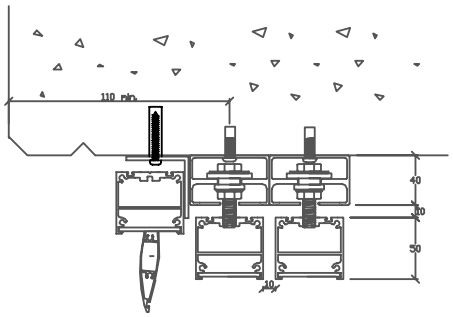

TYPICAL DETAIL – TOP TRACKS

ROLLASHIELD®
38 Pritchard St
Lytton QLD 4178
PH : 07 3393 3355
FAX : 07 3893 2515

PROJECT :

DRAWING TITLE :
ALUMINIUM LOUVRES
– General Details
Sliding Type

DRAWN : JM

DATE : JAN 2002

DRAWING No. :